HARRIS CONSULTING
Civil and Structural Engineers

OFFICES IN:
AUCKLAND
ALBANY
CHRISTCHURCH

STRUCTURAL CALCULATIONS

FOR

INFORMATION BOARD

PANMURE MAINSTREET

May 2001—

HARRIS CONSULTING LTD 52 PARNELL ROAD P.O. BOX 109 106 NEWMARKET AUCKLAND
TEL 09 367 1070 FACSIMILE 09 367 1071 EMAIL MAIL@HARRIS

HARRIS CONSULTING
Civil and Structural Engineers

Project: Panmure Mainstreet — Project No.: LAF 2044
Description: Information Board
Computed/Prepared By: — Date: May 2001
Reviewed/Checked By: — Date:
Ref/Dwgs: LAF Landscape Architects — Sheet 1 of

Panmure Notice board

Wind loading.

Wind Zone - Low wind (Auckland City Council)
V = 32 m/sec

CITY ENVIRONMENTS
17 MAY 2001
PROCESSED

$q_{ult.}$ - 0.614 kN/m²
$q_{serv.}$ - 0.4 kN/m²

Force on sign = 1.2 × 0.614 × 1.82 × 1.4 = 1.53 kN. — ult. wind

Bending on legs = (1.82×0.5 + 0.7) × 1.53/2 = 1.23 kNm

Try 76 NB dia × 3.6 THK C195 frame (76.1×3.6)
ϕM_b = 2.61 kNm > 1.23

deflection under serviceability wind.

$$= \delta = \frac{0.99\times10^3 \times 1.6\times10^3}{3\times 1.2\times10^6 \times 0.54\times10^6 \times 2}$$

= 6.37 mm and 1/252 ok for sign.

check pile embedment and base plate.

Bending on base plate = 1.23 kNm

HARRIS CONSULTING
Civil and Structural Engineers

Project: Panmure Mainstreet — Project No. LAF 2044
Description: Information Board
Computed/Prepared By: MH — Date: May 2001
Reviewed/Checked By: — Date:
Ref/Dwgs: LA4 Landscape Architects — Sheet 2 of

CITY ENVIR.
17 MAY 2001
PROCESSED

Bolts at 140 c-c

Bolt load = 1.23/0.14x2 8.78/2

= 4.39 kN.

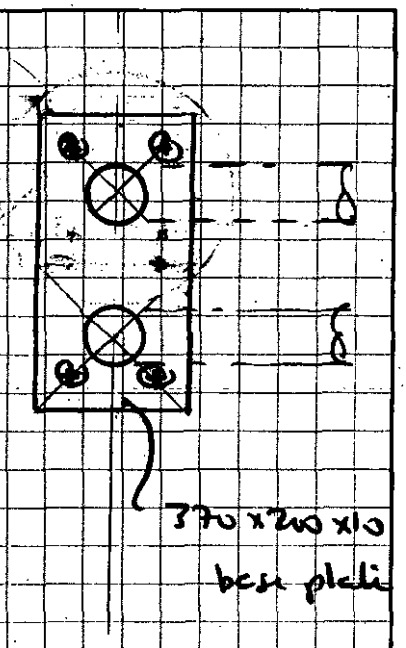

Use 4 | M16 grade 4.6 galv. H.D bolts

anchorage length to suit embedment

refer to attached sheet 3 for embedment.

Bending on base plate

= 4.39 x 0.05 = 0.22 kNm

capacity of 10 thick base plate (100 wide)

= 0.45 kNm > 0.22

Use 10 mm thick base plate with 4 M16 grade 4.6 galv H.D Bolts

LATERAL LOAD DESIGN FOR CAST IN TIMBER POSTS

POST C/C =	1	m	protruding	1.61	m above ground level
POINT LOAD (P)	0.77	kN	applied at	1.61	m above ground level
ULT FACTOR APPLIED TO P	1	==>	Pult =	0.77	kN
RETAINED SOIL HEIGHT (H)	0	m,	Ka/Kp =	0.5	SOIL DENSITY = 18 kN/m3
ULT FACTOR APPLIED TO H	1.2	==>	Fsoil =	0.00	kN
ULT FACTOR APPLIED TO H	1.4	==>	Fsoil =	0.00	kN
SURCHARGE (Q)	0	*Kn/m3, applied at retained surface height*			
ULT FACTOR APPLIED TO Q	1.6	==>Fsurcharge =		0.00	kN

ULT LOAD (Hu) 1.2G+1.6Q	0.77	kN applied at e =	1.610 m	M*	1.24 kNm
ULT LOAD (Hu) 1.4G	0.77	kN applied at e =	1.610 m	M*	1.24 kNm
DESIGN CASE (WORST CASE)	**0.77**	**kN applied at e =**	**1.610 m**		
Undrained shear strength Cu	50	kN/m2			
Cu' (reduced Cu for pile c/c)=	**50.25**	kN/m2			
ϕ factor for soil =	0.5				

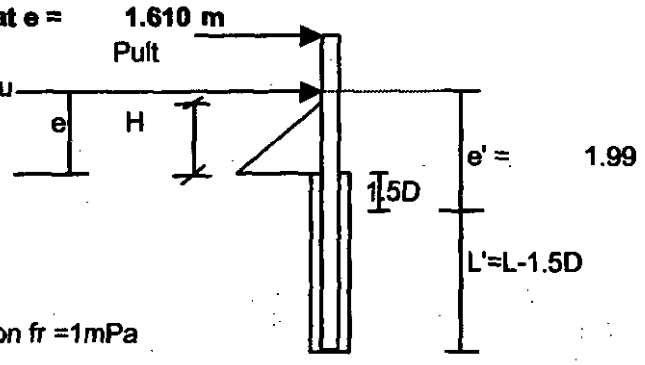

SED Pile diameter (d)	100	mm
Concrete casing diameter (D)	250	mm
Casing moment capacity Mc	1.44	kNm based on fr =1mPa

Using Broms theory:

B=(Hu)/(9Cu' x D x ϕ) = **0.014** ==>L =1.5D + B(1+(2 x (1 + 2e'/B))^1/2) = **0.72** m

f = Hu / (ϕ x 9 x Cu' x D) = **0.0136** M* pile = Hu (e + 1.5D + 0.5f - Mc/Hu) = **1.24** kNm

Pile cap. Based on k1=	0.6	K20 =	0.9	K21 =	0.85
and bending stress fb =	38	K22 =	1.00	E=	8.7

==> for pile diameter = **100** mm ==>ϕMb = **1.37** kNm

Bending Stress OK

Ixx pile = **4907813** mm4

Unfactored horiz. force = **0.77** kN

Deflection at tip of pile including allowance for creep = **50.17** mm

USE:	**100 mm SED PILE**
	250 mm CONC. CASING
	0.7 mm EMBEDMENT

200 x 400 x 700 OK
clup.

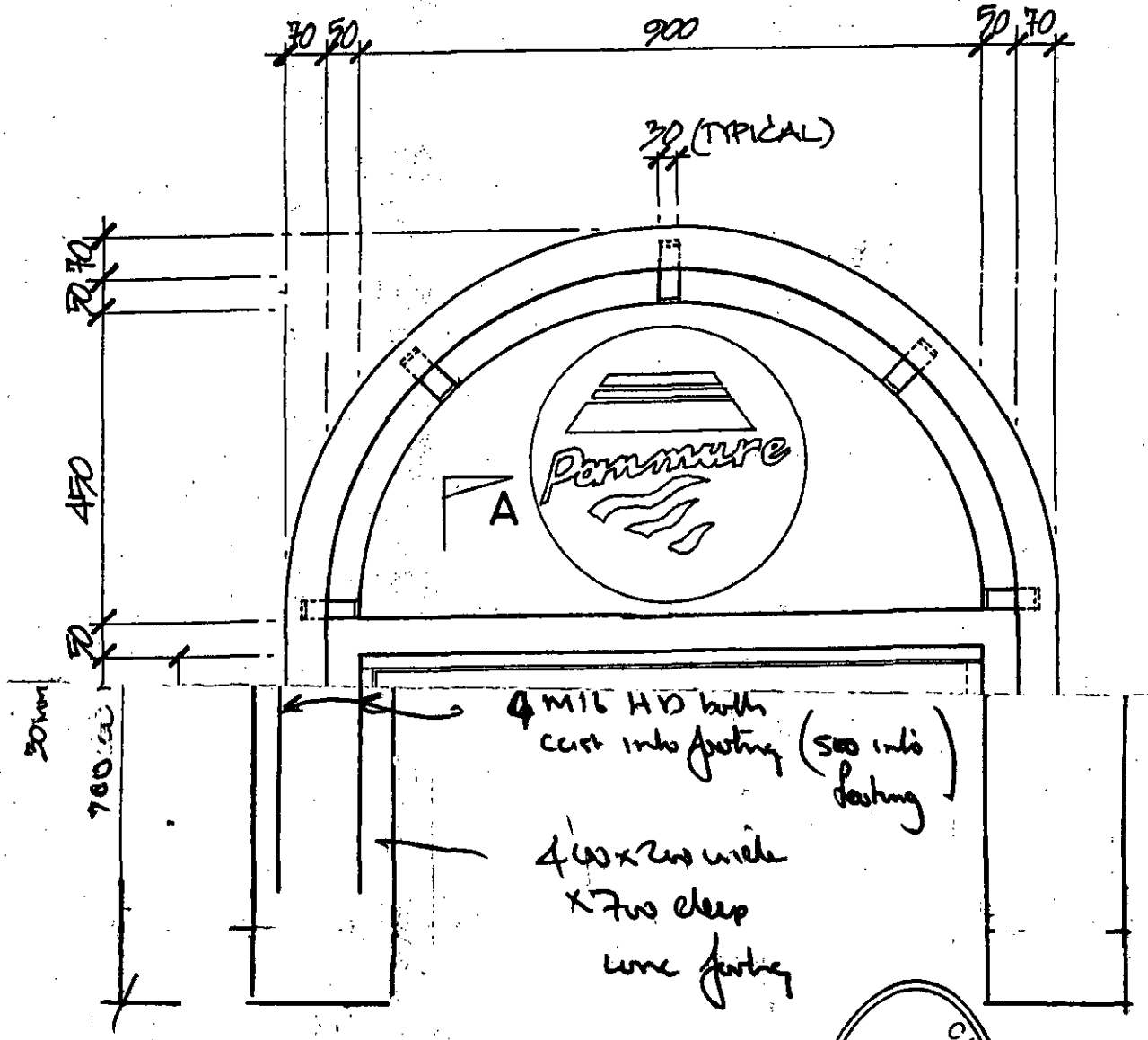

Sign foundations

CITY ENVIRONMENTS
17 MAY 2001
PROCESSED

4

DRAWI
SCALE:
DATE:
REF No:
DRAWN

© THIS DRAW
COPYRIGHT
EXI